Letter maze

Name: _____

There is a hidden message in the intricate maze below. To reveal it:
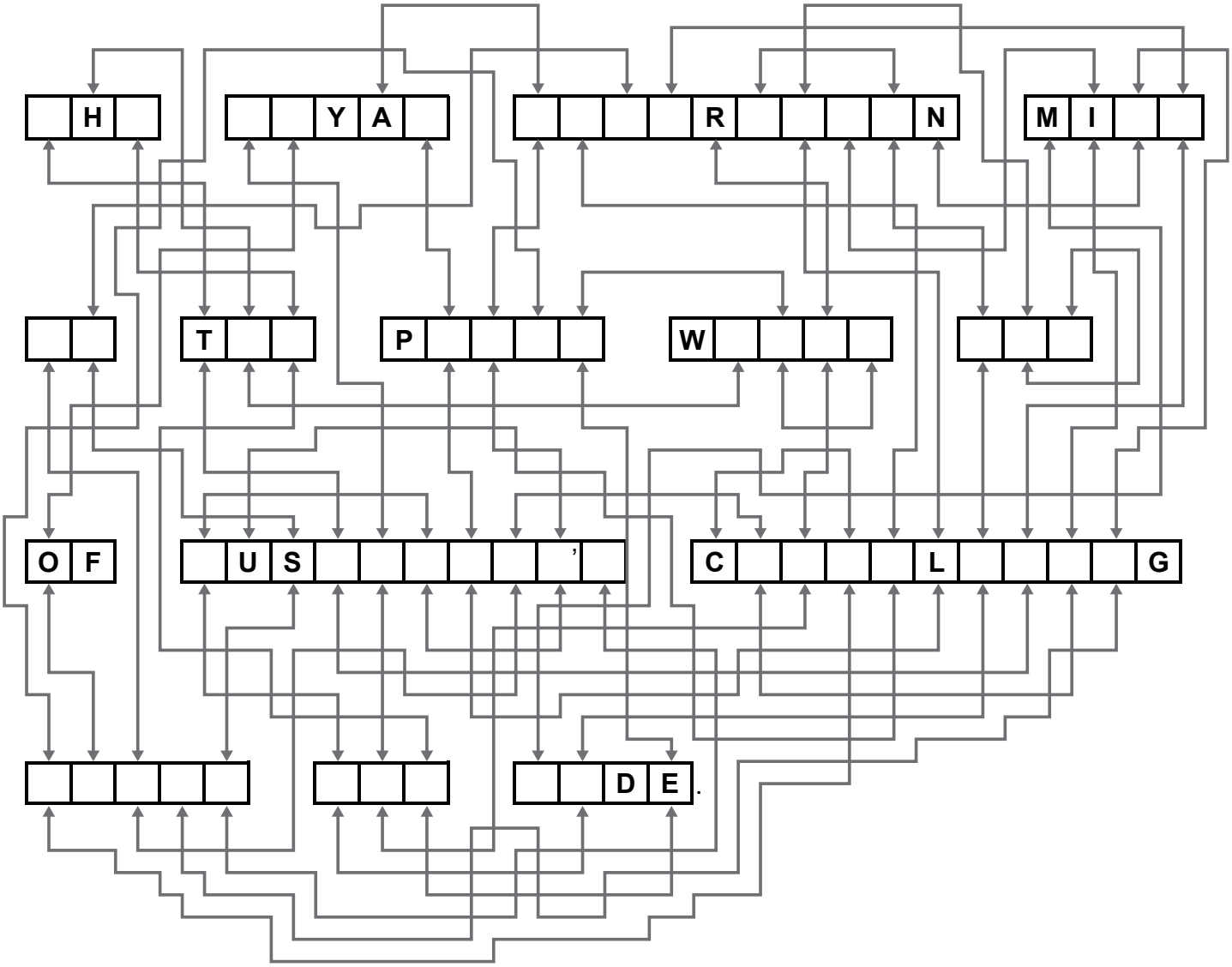
1. Find a box that contains a letter and has an arrow leading from it (perhaps start with the H).
2. Follow the arrow and write the same letter in the empty box that it leads to.
3. Check if there is another arrow leading from this box. If there is, follow that one and write the same letter in the box at the end.
4. If there isn't another arrow, choose a different letter and repeat the process until all the boxes have a letter in them.